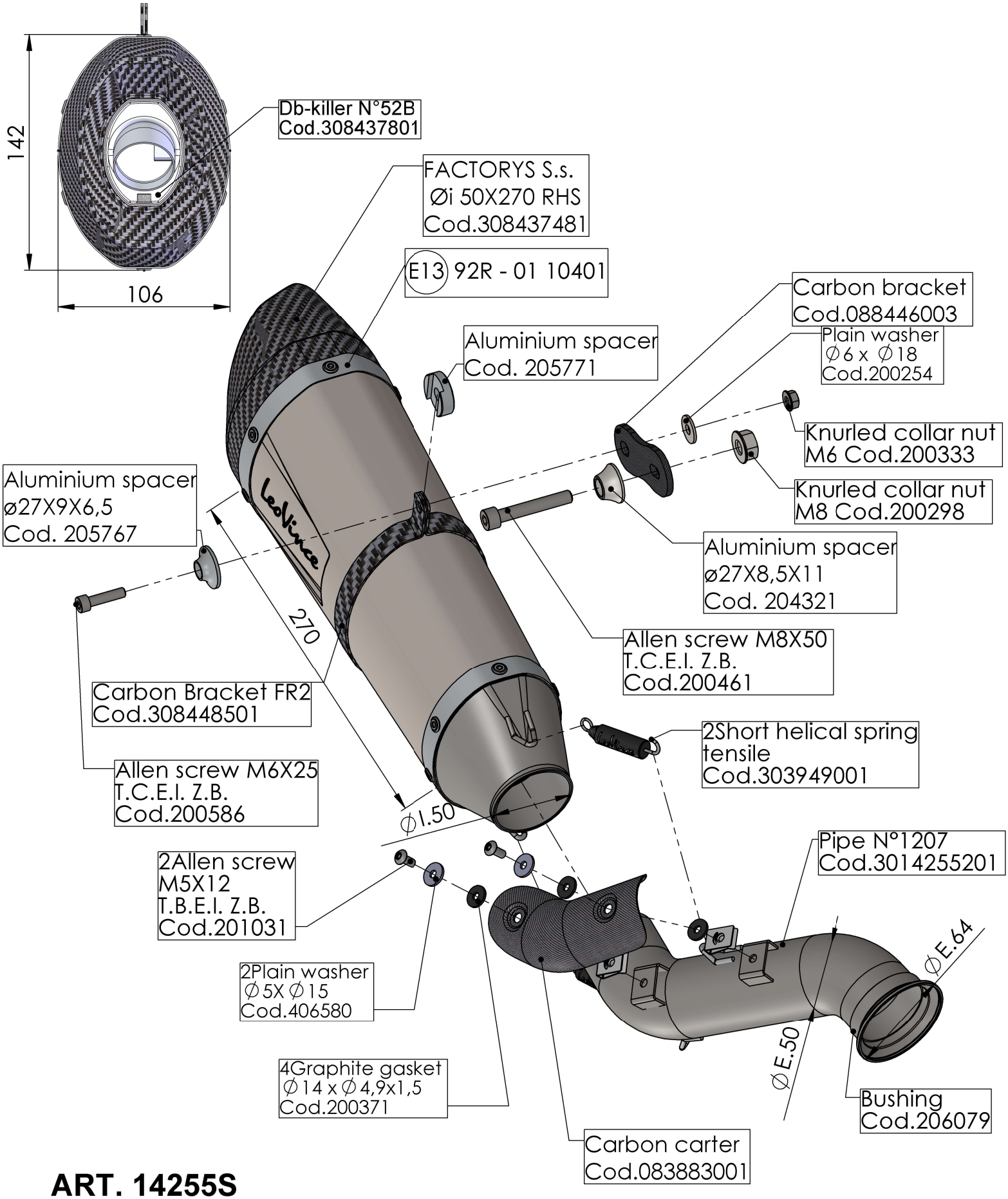

ART. 14255S

KTM DUKE 790

SLIP-ON - FACTORYS - STAINLESS S. - APPROVED